IJIRAE:: International Journal of Innovative Research in Advanced Engineering ISSN:2349-2163
Volume 13, Issue 03, March 2026 https://www.ijirae.com/archives
https://doi.org/10.26562/ijirae.2026.v1303.78

Enhancing Respiratory Health with Smart Cooling Masks and Immune System Monitoring

Dharani M
PG Scholar, Department of Medical Electronics,
Sengunthar Engineering College (Autonomous), Tiruchengode, India
dharanim121@gmail.com@gmail.com

Reshma.R
Assistant professor, Department of Medical Electronics,
Sengunthar Engineering College (Autonomous), Tiruchengode, India
reshmapraveen027@gmail.com
https://orcid.org/0009-0008-7628-4712

Publication History
Manuscript Reference No: IJIRAE/RS/Vol.13/Issue03/AEMR26.MRAE10159
Research Article | Open Access | Double-Blind Peer-Reviewed| ArticleID:IJIRAE/RS/Vol.13/Issue03/AEMR26.MRAE10159
Received:22,February 2026, Revised: 01, March 2026, Accepted: 16,March 2026,Published Online: 25, March 2026.
https://www.ijirae.com/volumes/Vol13/iss-03/78.AEMR26.MRAE10159.pdf
Article Citation: Dharani,Reshma(2026), nhancing Respiratory Health with Smart Cooling Masks and Immune System Monitoring , IJIRAE: International Journal of Innovative Research in Advanced Engineering, Volume 13, Issue 03 of 2026 pages 578-584 **Doi:>** https://doi.org/10.26562/ijirae.2026.v1303.78
BibTeX Key: Dharani@Enhancing
IJIRAE papers should be cited as IJIRAE (International Journal of Innovative Research in Advanced Engineering, AM Publications, India 2025, ISSN 2349-2163, https://doi.org/10.26562/ijirae.2026.v1303.78 The journal's official abbreviation is IJIRAE. Orcid: https://orcid.org/0009-0004-9398-7488

Abstract: The SARS-CoV pandemic has wreaked havoc worldwide, making face masks one of the most effective and validated protective measures. Standard disposable masks lack comfort features such as adjustable straps, smooth edges, and enough nose padding, rendering them uncomfortable for prolonged use. Individuals with respiratory problems face significant challenges, potentially impacting their respiratory system and immune response. We introduce the Smart Cooling Mask with Real-Time Human Immunity Level, a wearable health monitoring solution designed to tackle these issues. This unique item, a duck bill mask, is constructed from flexible, woven cloth and has an independently removable Immunity Detector item. It enables users to track their health and then offers practical, sequential recommendations based on their immune system outcomes to enhance their immune function over time. The system comprises a closed-loop control mechanism and bio-sensors, including heart rate, blood pressure, pulse oximeter, and body temperature sensors, all equipped with an onboard microprocessor chip. A dedicated smartphone application that synchronizes with the device enables remote control, health alerts, reminders for mask maintenance, and overall health management.
Keywords: Health Monitoring with the use of IoT, respiratory disease detection, air quality analysis, COPD prediction, asthma monitoring, AI-based Alert System, Worker safety in industries.

I. INTRODUCTION

Wearable health monitoring systems in the form of smart masks have received a considerable level of attention in the context of continuous respiratory health monitoring, particularly following outbreaks of respiratory diseases in the world [1]. These solutions consist of biosensors, microprocessor chip and Internet of Things (IoT) connection to enable real-time and health control on a smartphone [2]. Recent research has discussed self-powered smart mask technologies which are based on alternative energy harvesting methods. Electricity generators which can run wearable respiratory monitors with moisture have already been created to run their devices by humidity in the breath [3]. To convert the temperature difference in the breathing process to electrical energy that would be used to drive the biosensors and IoT modules, thermoelectric generators such as SACNT/PANI systems may be used [4]. On the same note, mechanically powered respiratory devices that use hybrid piezo-triboelectric nanogenerators integrated in smart masks generate forces out of breathing movements and can be used to enable respiratory sensing [5]. Self-powered respiratory monitoring has also been proposed using TENG textile masks and Ti 3 C 2 T 0 /PANI sensing modules [6], and triboelectric nanofiber sensors allow continuous breathing monitoring and IoT wireless communication [7]. Wearable respiratory monitoring devices using piezoelectric materials and nanofiber materials have been used through various types of piezoelectric and nanofiber sensors. PVDF/CNT piezoelectric nanofiber smart masks are high sense detectors of various breathing patterns [8], and flexible barium titanate piezoelectric sensors can be used to monitor respiratory functions in mask platforms in real-time [9]. Besides this, thermoelectric smart masks are also created which have the possibility to measure respiratory rate by applying temperature-based sensing principles [10].

Biochemical and environmental respiratory analysis Smart masks have also been created [11]. IoT-enabled monitoring platforms have also been integrated with sensors of temperature, humidity, CO 2, and volatile organic compounds (VOC) in the breath [12]. Electrospun nanofiber-based inflammable materials with silver and carbon nanoparticles also aid in the creation of smart masks as respiratory protection and monitors [13]. Other types of masks have also been tested to be used in breathing protective masks like surgical masks, N95 masks, and smart masks in a pandemic situation [14]. A few of them are respiratory monitoring systems that integrate AI, acoustic sensing, and advanced signal analysis. Nanocomposite soundwave sensor smart masks can help detect breathing, coughing, and speaking cues to identify the disease with the help of machine learning models [15]. SpiroMask is the gadget that detects volume of the lungs and the rate at which wearable monitors detect breathing by having microphones in the masks [16]. By the same measure, 3D carbon nanofiber mat dual-mode breathing sensors can record a variety of respiratory patterns [17]. Smart mask frameworks that are IoT-based have also been suggested as a way of real-time health monitoring and disease prevention through sensor integration, wireless communication, and smart data analysis [18]. Research has also covered the aspect of the design of smart masks, comfort, and usability such as consumer preference analysis and better structural mask design that can be used long-term [19]. Other solutions are self-powered FPENG smart masks that monitor breathing signals [20], biodegradable self-disinfecting masks with silver nanoparticles [21], and mask-based devices that can collect biofluids to examine respiratory biomarkers [22]. The Smart Mask is a novel, reusable mask designed for safety and comfort. Composed of adaptable, skin-friendly material, it maintains comfort even during prolonged use. In contrast to conventional masks, it incorporates a Real-Time Human Immunity Detection Level system and a PM 2.5 filter, hence augmenting its efficacy against viruses. The immunity-check feature of this mask is both accessible and economical, facilitating widespread use without sacrificing quality. The mask is environmentally sustainable, reusable, easily washable, and features a removable filter. The Smart Mask's superior comfort and protective capabilities establish it as a premier option for viral defense and chronic illness prevention.

II. METHODOLOGY

The mask features a detachable Internet of Things (IoT) gadget that includes sensors and a microcontroller [23]. The mask's fabric is exceptionally thin and has received approval from the Centexbel textile laboratory for its efficacy against COVID-19. A respiratory disease (COVID-19) lab-on-mask multiplexed sensor system was designed to monitor respiratory diseases in real-time [24]. It also incorporates a PM 2.5 filter, providing superior breathability and safeguarding against pollutants and microorganisms. The removable IoT device enables the mask to be laundered and reused. It integrates a heart rate sensor, a pressure sensor, a pulse oximeter, and a temperature sensor, all programmed and incorporated into the microprocessor. The wearable health monitoring system is a combination of bio- sensors, microprocessor chip processing and Internet of Things communication with smartphone applications to provide continuous health management [25]. These sensors are meticulously selected to guarantee sensitivity and optimal performance within their operational parameters. The high-performance microcontroller functions on minimal power and enables concurrent data acquisition from the sensors. Furthermore, it transmits this data wirelessly to the cloud for additional analysis and storage.

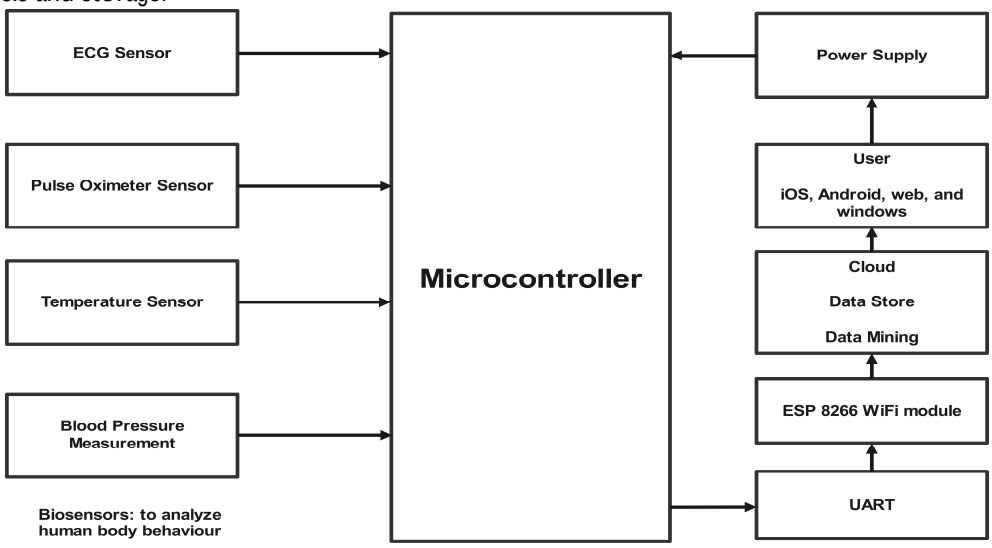

Fig. 1: System Architecture

III. COMPONENTS AND TECHNOLOGY

A. Mask

The mask's fabric is a significant feature; its thin and permeable nature renders it extremely advisable, considering the extreme fluctuations in climatic conditions that qualify it as an all-season mask. Accompanied by a PM 2.5 filter on the interior, which filters air pollutants and industrial and microbiological contaminants. Consequently, providing improved hygienic air for respiration. It possesses an internal layer that facilitates its removal from the IoT device. The material employed is washable, rendering it a practical reusable option for an extended period.

B. Temperature Sensor

Among the sensors built into the microcontroller is the temperature sensor, distinguished for its remarkable precision among analog integrated circuit temperature sensors on the market.

This sensor demonstrates a remarkable average accuracy of 0.05°C throughout the range of 25°C to 45°C, making it particularly adept for measuring body temperature. The selection considered its compact dimensions, lightweight construction, and operational range tailored for the human body. It can detect temperature variations as minimal as 0.1 degrees Celsius, functioning throughout a broad spectrum of -55 to 150 degrees Celsius, utilizing a 2-5 volt potential difference and delivering analog output. The temperature sensor is linked to the microcontroller, which consistently initiates periodic measurements of body temperature and later gathers and analyzes the data. The TI Tiva TM4C123G Microcontroller is equipped with a 12-bit resolution Analog-to-Digital Converter (ADC) providing 4096 discrete levels. The LM35 sensor generates a 10 mV signal for degree of temperature variation. Given LM35's maximum temperature of 300 degrees Fahrenheit, peak output voltage would be 3000 mV (or 3.00 V). This output voltage consistently remains beneath the 3.3V reference voltage (Vref) utilized in the system. In the Basic configuration, the output swing varies from around 0V (20mV) to 1.5V. Thus, utilizing VREF of 3.3 Volts results in resolution of 0.0008V or 0.8mV, given that the TM4C123GH6PM is equipped with a 12-bit ADC. The sensor's standard at temperature were 0.25°C, with a accuracy of 0.5°C at the same temperature. With a scale factor of 10 mV/°C, resolution of 3.22 mV does not meet the required specifications. To obtain improved resolution, a lower voltage reference, such as 1.8 V or 2 V, can be utilized. For instance, selecting a 1.8 V reference provides a resolution of approximately 1.75 mV. However, in this interface example, a 3.3 V reference voltage is considered, as it aligns with the voltage level used by the development board.

Transfer Function and Temperature Output Conversion (°C): $VOUT(mV) = 10mV/\circ C * T$

Using given equation, where VREF represents the reference voltage at volts and the scale factor is expressed as V/°C, the temperature (T) be determined from the 12-bit ADC output.

T = (ADC_RESULT * VREF)/4096 * 0.01 °C Which can be simplified as, T = (ADC_RESULT * VREF * 100)/4096 °C So, when using VREF = 3.3V we get, T = (ADC_RESULT * 330) / 4096 °C

C.Pulse Oximeter Sensor

The pulse oximeter sensor noninvasively measures blood oxygen saturation by continually monitoring oxygen levels. This sensor, selected for its sensitivity and compatibility with human skin, is affixed to an IoT device and linked to a microcontroller that receives its analog output. The apparatus employs two LEDs: one that emits red light and the other that emits infrared light. Infrared light exclusively monitors pulse rate, whereas both LEDs evaluate oxygen saturation by examining light absorption patterns. Oxygenated blood absorbs greater amounts of infrared light and transmits more red light, while deoxygenated blood exhibits the contrary behavior. The absorption readings are retained in a buffer accessible through I2C for processing, facilitating accurate, portable monitoring.

D. Heart Rate Sensor:

The Pulse oximeter sensor fulfills the function of the heart rate sensor.

It quantifies the pulse waves, which signify the variations in the volume of a blood vessel resulting from the heart's pumping action. A single sensor can replace numerous sensors for the output. The operational sensor is chosen for its high efficiency and low power consumption, functioning without a booster circuit. Therefore, further simplifying the circuitry and thereby decreasing the size without compromising the output.

E. Blood Pressure Sensor:

A pressure sensor quantifies blood pressure, whereas an immunity detector records ECG, pulse rate, and SpO2 levels. The pulse transit time (PTT), defined as the duration for a pressure wave to traverse between two artery locations, is derived from this data. PTT, which is inversely correlated with blood pressure, is ascertained by measuring the duration between the ECG R peak and the systolic pulse peak. This facilitates the estimate of Pulse Wave Velocity (PWV), associated with vascular elasticity through the Bramwell-Hills and Moens-Kortweg equations [26].

$$WV = \frac{L}{\text{Time Delay}}$$

The equations given by Bramwell-Hills and Moens-Kortweg demonstrate a logarithmic relationship between Blood Pressure (BP) and Time Delay.

$$\text{Blood Pressure} = a * (\text{Time Delay}) + b * HR + c$$

The correlation between heart rate (HR) and Arterial Stiffness Index (ASI) influences blood pressure, as indicated in the reference.

F. ESP8266 WiFi module:

The ESP8266 WiFi Module, along with an integrated TCP/IP protocol stack, operates as an independent system-on-chip (SoC), facilitating effortless communication between any microcontroller and your WiFi network. The wearable health monitoring platform operates through Internet of Things connectivity using a WiFi Module and smartphone application for continuous health management [27] The ESP8266 effortlessly controlled over either local Wi-Fi network or internet. To program module, employ an Arduino or USB-to-TTL by connecting to the serial pins.

G. TIVA C Microcontroller:

The TIVA C Series MCU is a microcontroller utilizing the ARM Cortex M4 processor, providing superior power efficiency and a broader array of I/O capabilities compared to Arduino microcontrollers.

Extensive knowledge on hardware and software system design, as well as I/O interface, is accessible to support various embedded system designs employing the TM4C123 microcontroller.

IV. APPLICATION SOFTWARE

The data obtained from biosensors is transmitted to the cloud through an ESP Wi-Fi module for analytical processing and storage. The software architecture consists of multiple routines and models that facilitate data flow. The extraction of essential characteristics from raw data is facilitated by either Exploratory Data Analysis (EDA) or Predictive Data Analysis (PDA). However, PDA necessitates increased processing resources. Consequently, we are implementing EDA as a mechanism for analysis and alarm dissemination. A refined model for predictive analysis will enhance the system in the near future.

Two Major Components of the architecture are: **Cloud:**

Cloud service providers enhance their storage solutions and deliver a comprehensive application of the Software as a Service (SaaS) concept. The sensor-collected data is sent via the microcontroller, enabled by the ESP WIFI module, and efficiently sent to the cloud. The wearable health monitoring system operates through Internet of Things communication using a WiFi Module and smartphone application for real-time health management [28]. Data streams are processed in the cloud via the SAAS approach, facilitating real-time analysis and transmission to the Android application.

A. Application:

The application will be created for cross-platform compatibility, encompassing iOS, Android, web, and Windows. It offers an intuitive User Interface for enhanced comprehension of health condition. We will construct it using Flutter and integrate it with Firebase. Users will receive real-time updates on numerous health metrics, contingent upon internet connectivity. The system will provide specific activities, including a sign-in option for record access, as well as numerous warnings and parameter readings. Records will be systematically updated, and prior data will be archived in the database [29].

V. EXPERIMENT RESULT

Our methodology encompasses four elements. Let us define TN as the Normal Temperature State and TM as the Measured Temperature State; thus, T = TN - TM. Through multiple iterations for a specific parameter, we estimate various readings (derived from the sensor output values) and their derivatives T [30]. Similarly, we can categorize different parametric analyses based on iterative application. The values may vary among individuals due to differences in lifestyle, ethnicity, geography, age, gender, and other life circumstances.

$$IF = f(\Delta T, \Delta P, \Delta H, \Delta O)$$

for an individual under typical living conditions Immunity Function (IF) is defined as the consistency among several parameters over iterative or routinely updated sensor data. The different and independent nature of these factors necessitates their individual investigation. The $\square O$, in contrast to $\square T$, demonstrates greater consistency or reduced standard deviation among individuals of the same age group, sex, ethnicity, or regional background.

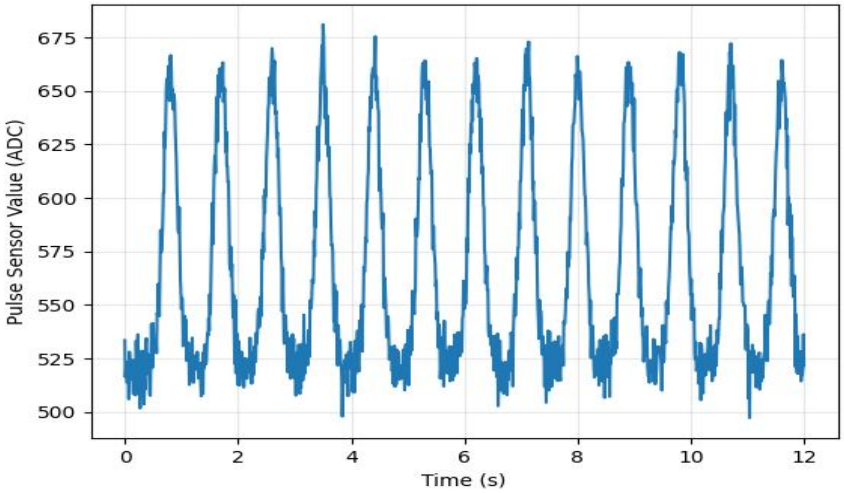

Fig. 3. Output result of Pulse Sensor

VI. CONCLUSION AND FUTURE WORK

The Smart Mask is constructed from skin-friendly, woven fabric that provides year-round comfort by adjusting to temperature fluctuations. This fabric absorbs moisture, offering a cooling sensation in summer and additional warmth in winter, so maintaining ideal comfort. The mask, equipped with an Immunity Detector, allows users to monitor their immunity levels daily via a smartphone. The detector's data, available through an application, evaluates immunity state and provides dietary suggestions for immunocompromised individuals to enhance resilience against diseases. This function enables users to monitor vital signs and metabolism at home, hence diminishing the necessity for frequent visits to diagnostic centers. In addition to COVID-19, the mask facilitates continuous health awareness by allowing for daily assessments of immunity. The Immunity Detector, when connected to an internet-enabled device, transmits data to a cloud server operated by a telecommunications or mask business. The detection module evaluates anomalies, issues notifications, and supplies recommendations. In instances of sustained aberrant readings, the system advises medical oversight to guarantee thorough health assistance. By integrating several sensors, masks can furnish users with an extensive comprehension of their environment and personal wellness.

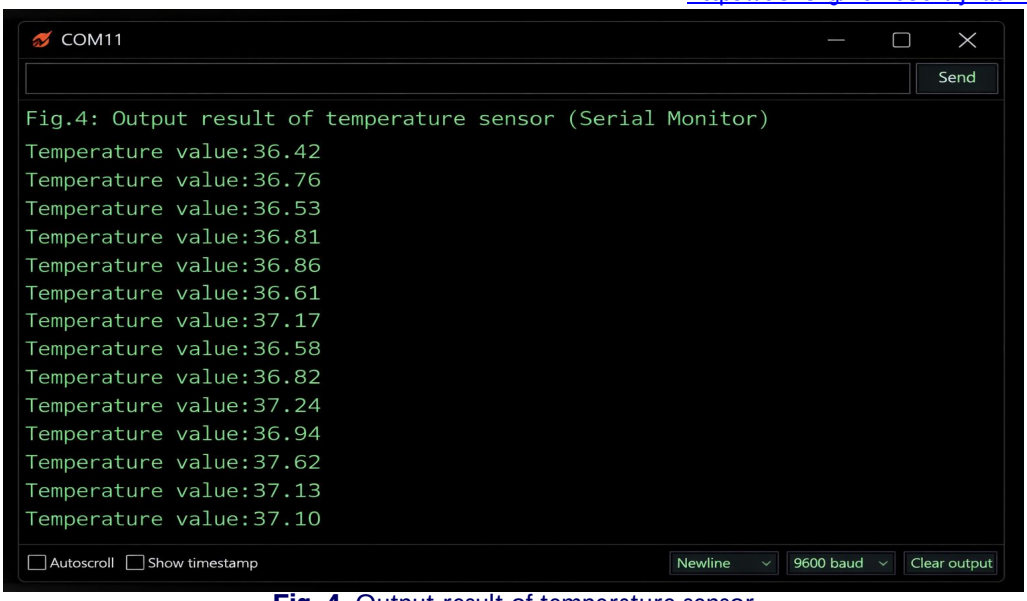

Fig. 4. Output result of temperature sensor

a. Augmented Monitoring: Numerous sensors within the mask provide an extensive evaluation of health and environmental conditions, recording data such as heart rate, temperature, air quality, and UV exposure.
b. Individual Variability: The mask's numerous sensors accommodate specific requirements and adjust to various situations, guaranteeing customized protection and wellbeing.
c. Synergistic Insights: Integrating data from many sensors reveals concealed patterns and yields a more precise evaluation of overall health and environmental situations.

Future projections for the work include:

a. Advanced Sensor Integration: Masks will incorporate biometric, environmental, and chemical sensors to provide a holistic awareness of individual health and environmental conditions.
b. Real-time Data Analysis: Algorithms will analyze sensor data instantaneously, allowing masks to deliver immediate feedback and alarms for prompt responses to health threats and environmental dangers.
c. Smart Mask Connectivity: Masks will connect to smart devices, facilitating seamless data transfer, personalized recommendations, and automated functions.
d. Enhanced User Experience: Future masks will emphasize user comfort through lightweight materials, adjustable designs, and intuitive interfaces.

The immunity detector will receive enhancements in sensors and processing technologies, emphasizing improved analytical methods to strengthen its detection capabilities. Machine learning and AI-driven recommendations will be adopted for healthcare evaluation, enhancing the identification of subtle symptoms and facilitating early diagnosis. The primary aim is to manufacture the immunity detector at a cost-effective price, guaranteeing its accessibility to all users, particularly those living in rural regions. By developing a gadget capable of autonomous operation, individuals would possess the ability to meticulously monitor and control their health, especially in areas with a shortage of medical personnel.

REFERENCES

1. K.H.Yip and Y.C.Yip, "Use of thin silicone dressings for prolonged use of filtering facepiece respirators: Lessons from the universal community testing programme during the COVID-19," Int. Wound J., vol. 19, no. 5, pp. 1188–1196, 2022, https://doi.org/10.1111/iwj.13714.
2. V.Ratnayake Mudiyanselage, K. Lee, and A. Hassani, "Integration of IoT Sensors to Determine Life Expectancy of Face Masks," Sensors, vol. 22, no. 23, 2022, https://doi.org/10.3390/s22239463.
3. E.Tan, Y.Liu, C.Hu, Z.Zhu, and B.Liu, "Low-Humidity-Dependent and Stretchable Moisture-Electricity Generator Based on Ti3C2TxMXene-Loaded Cotton and Hydrogel Bilayer for Green Power Harvesting and Wearable Electronics," ACS Appl. Mater. Interfaces, vol. 17, no. 34, pp. 48375–48386, 2025, https://doi.org/10.1021/acsami.5c11850.
4. Y.Qian,W.Cheng,Y.Zheng,N.Chen, W.Zhang, and L.Chen, "Rational design of superaligned carbon nanotube/polyaniline generator for integrated wearable, self-powered sensing and actuating multifunctions," Chemical Engineering Journal, vol. 531, 2026, https://doi.org/10.1016/j.cej.2026.173741.
5. Y.Zhong, L.Ma, P.He, Q.Zhao, and J. Li, "Hybrid Piezo/Triboelectric Nanogenerators Based on Nanofibrous Aerogels for Energy Harvesting and Respiratory Monitoring," ACS Sens., vol. 10, no. 11, pp. 8839–8851, 2025, https://doi.org/10.1021/acssensors.5c02789.
6. J.Huang, Y.Huang, T.Li, H.Xu, H.Wu, and Z.Su, "Respiration-Driven Ammonia Sensing Mask for Multifunctional Self-powered Monitoring Application," Chemical Engineering Journal, vol. 507, 2025, https://doi.org/10.1016/j.cej.2025.160598.

7. X.Chen et al., "A Moisture-Proof, Anti-Fouling, and Low Signal Attenuation All-Nanofiber Triboelectric Sensor for Self-Powered Respiratory Health Monitoring," Adv. Funct. Mater., vol. 35, no. 7, 2025, https://doi.org/10.1002/adfm.202415421.
8. B.Lan et al., "A Highly Sensitive Coaxial Nanofiber Mask for Respiratory Monitoring Assisted with Machine Learning," Advanced Fiber Materials, vol. 6, no. 5, pp. 1402–1412, 2024, https://doi.org/10.1007/s42765-024-00420-w.
9. Q.Zeng, S.Han, Y.Liang, and X.Tian, "Development of flexible multi-phase barium titanate piezoelectric sensor for physiological health and action behavior monitoring," Sheng Wu Yi Xue Gong Cheng Xue Za Zhi, vol. 41, no. 3, pp. 421–429, 2024, https://doi.org/10.7507/1001-5515.202404016.
10. Y.Zhang, Z.Xiao, B.Liu, X.Ren, and C.Liu, "A Novel Sensible Smart Mask Using Micro Thermal-Electric Energy Conversion Elements †," Micromachines (Basel)., vol. 15, no. 8, 2024, https://doi.org/10.3390/mi15080991.
11. W.Heng et al., "A smart mask for exhaled breath condensate harvesting and analysis," Science (1979)., vol. 385, no. 6712, pp. 954–961, 2024, https://doi.org/10.1126/science.adn6471.
12. M.Setiawan, M.A.Malik, and K.Fobelets, "Correlation between Smart Mask and Knitted Coil Sensors Breathing Data †," Engineering Proceedings, vol. 52, no. 1, 2024, https://doi.org/10.3390/engproc2023052015.
13. A.H.Ramezani, Z.Ebrahiminejad, S. Asgary, L. Dejam, and K. Behzad, "Identify the color of pollution with fabrication of nanofibers for smart masks containing antibacterial nanoparticles and photoluminescence," Journal of Theoretical and Applied Physics, vol. 18, no. 6, 2024, https://doi.org/10.57647/j.jtap.2024.1806.82.
14. S.Ghosh, V.Dave, P.Sharma, A.Patel, and A.Kuila, "Protective face mask: an effective weapon against SARS-CoV-2 with controlled environmental pollution," Environmental Science and Pollution Research, vol. 31, no. 29, pp. 41656–41682, 2024, https://doi.org/10.1007/s11356-023-30460-5.
15. J.Suo et al., "Wide-Bandwidth Nanocomposite-Sensor Integrated Smart Mask for Tracking Multiphase Respiratory Activities," Advanced Science, vol. 9, no. 31, 2022, https://doi.org/10.1002/advs.202203565.
16. R.Adhikary et al., "SpiroMask: Measuring Lung Function Using Consumer-Grade Masks," ACM Trans. Comput. Healthc., vol. 4, no. 1, 2023, https://doi.org/10.1145/3570167.
17. Z.Pang, Y.Zhao, N.Luo, D.Chen, and M.Chen, "Flexible pressure and temperature dual-mode sensor based on buckling carbon nanofibers for respiration pattern recognition," Sci. Rep., vol. 12, no. 1, 2022, https://doi.org/10.1038/s41598-022-21572-y.
18. J.Hyysalo et al., "Smart mask – Wearable IoT solution for improved protection and personal health," Internet of Things (Netherlands), vol. 18, 2022, https://doi.org/10.1016/j.iot.2022.100511.
19. B.Hu and S.Koo, "Development of wearable device designs for respiratory infection prevention," International Journal of Clothing Science and Technology, vol. 34, no. 5, pp. 764–781, 2022, https://doi.org/10.1108/IJCST-07-2021-0094.
20. R.Ragu,B.Kim,R.M. Bhattarai, "Dysprosium tungstate incorporated on exfoliated layered molybdenum disulfide-based a flexible and wearable piezoelectric nanogenerator for the dual purpose of self-powered energy harvesting and a smart mask for human breath monitoring," Nano Energy, vol. 118, 2023, https://doi.org/10.1016/j.nanoen.2023.109024.
21. P.Zhao et al., "Antibacterial, antiviral, and biodegradable collagen network mask for effective particulate removal and wireless breath monitoring," J. Hazard. Mater., vol. 456, 2023, https://doi.org/10.1016/j.jhazmat.2023.131654.
22. Z.Jin et al., "Mapping Aerosolized Saliva on Face Coverings for Biosensing Applications," Anal. Chem., vol. 93, no. 31, pp. 11025–11032, 2021, https://doi.org/10.1021/acs.analchem.1c02399.
23. Z.Li et al., "AI-driven smart mask-based respiratory monitoring system utilizing a high-performance and biocompatible PVA/PVP/graphene composite thermoelectric film," Chemical Engineering Journal, vol. 524, 2025, https://doi.org/10.1016/j.cej.2025.169295.
24. L.Pan et al., "Lab-on-Mask for Remote Respiratory Monitoring," ACS Mater. Lett., vol. 2, no. 9, pp. 1178–1181, 2020, https://doi.org/10.1021/acsmaterialslett.0c00299.
25. Q.Yu,Y.-N. Zhang,J.Zhang,S.Yang,L.Jiang, and X.Li,"Smart fiber-optic masks: real-time respiratory monitoring and health analysis," Science China Information Sciences, vol. 68, no. 4, 2025, https://doi.org/10.1007/s11432-024-4323-6.
26. A.S.Pillai et al., "Engineered self-sterilizing face masks via silver nanowire-microparticle composite ink printed on fabrics," Chemical Engineering Journal, vol. 531, 2026, https://doi.org/10.1016/j.cej.2026.173432.
27. T.Wang et al.,"Humidity-compatible chemiresistive hydrogel sensor for real-time breath CO2 monitoring," Chemical Engineering Journal, vol. 524, 2025, https://doi.org/10.1016/j.cej.2025.169155.
28. T.Mathew, C.Anjaneyulu, J.Mohapatra, R. Brithik Biju, and A. C. Anoop, "A Smart Dual-Thermistor-Based Nasal Mask for Respiratory Health Monitoring," IEEE Sens. Lett., vol. 10, no. 2, 2026, https://doi.org/10.1109/LSENS.2025.3649915.
29. X.Wu et al., "Machine Learning-Augmented Piezoelectric-Ferroelectret Nanogenerators for Highly Sensitive Respiration Monitoring in Wearable Healthcare," Adv. Funct. Mater., 2026, https://doi.org/10.1002/adfm.202522897.
30. S.Selvadass, J.J.John Paul, I. Thusnavis Bella Mary I, I. S. V Packiyavathy, and S. Gautam, "IoT-Enabled smart mask to detect COVID19 outbreak," Health Technol. (Berl)., vol. 12, no. 5, pp. 1025–1036, 2022, https://doi.org/10.1007/s12553-022-00695-2